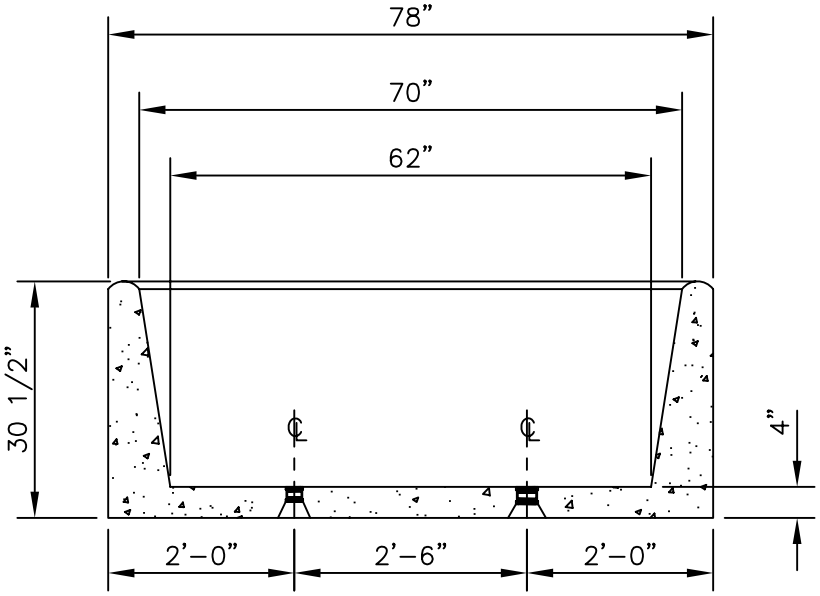

SECTION "AA"

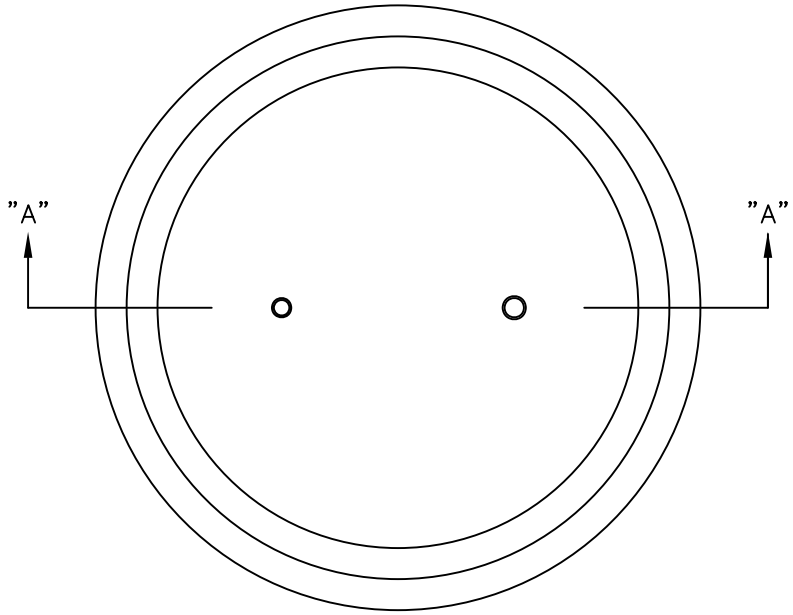

TOP VIEW

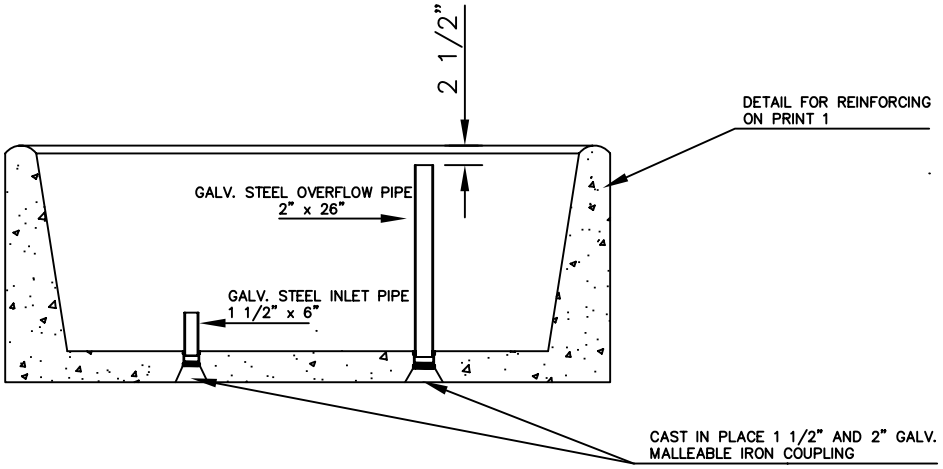

SECTIONAL VIEW WITH PLUMBING

PHONE: 800-837-8918
FAX: 304-464-4013
CARR CONCRETE
CARR CONCRETE CORPORATION
P.O. BOX 265, WAVERLY, WV 26184-0265

400 GAL. WATERER				DWG.NO.	REV	DATE
				1	6	6
					5	5
					4	4
					3	3
				OF	2	2
				1	1	1
FILE#	JR93019	DRAWN BY JOR	DATE 12/10/93			